ANCOR

703079

Operating Manual



600A True RMS Digital Clamp Meters

P/N: 11040110*** X
Aug 2019 REV. 0

Contents

I. Overview----------1
II. Open-case inspection----------1
III. Safety operation guidelines----------2
IV. Electrical symbol----------4
V. External construction----------5
VI. Display symbols----------6
VII. Key function, auto power-off and buzzer----8
VIII. Technical indicator----------9
1. General specification----------9
2. Environmental restraints----------10
3. Electrical specifications----------11
IX. Measurement operating instructions----15
1. AC measurement t----------15
2. DC current measurement----------17
3.AC voltage measurement ----------19
4. DC voltage measurement ----------21
5. Resistance measurement ----------22
6. Continuity test----------23
7. Diode measurement ----------25
8. Capacitance measurement ----------26
9. Frequency ----------28
10. Temperature measurement ----------29
11. Non-contact AC voltage sensing NCV--30
12. Power gear ----------31
13. Automatic shutdown function ----------31
X. Maintenance and upkeep----------31
1. General maintenance----------31
2. Installation or replacement of battery---31

I. Overview

703079 is a portable true 35/6 bit (6000 Counts), auto range clamp ammeter with simulation bar. The clamp ammeter, centered by large scale integrated circuit Σ/Δ analog-digital converter, featuring full-function on screen display, full-range overload protection and unique appearance design has become a specific clamp ammeter with superior performance. The clamp ammeter is applicable to following measurements: AC/DC voltage, AC/DC current, surge current, resistance, diode, circuit on-off, capacitance, temperature, frequency, data-hold, maximum/minimum value measurement, relative value measurement, flashlight function, VFC function, NCV function, under-voltage display and automatic shutdown function.

The instruction manual includes relevant safety information and warning indication, please read them carefully and strictly observes all warnings and notes.

⚠ Warning:

Prior to using clamp meter, please read the relevant “Safety operation guidelines”carefully.

II.Open-case inspection

Unpack and take out the instrument, please check carefully if the following attachments are complete or intact.

1. An operating instruction manual
2. A test pen
3. K-shaped temperature probe
4. A bag

5. Warranty
In case of shortage or damage, please contact with your supplier.

protection impairment if used in a manner not specified by the manufacturer
probe assemblies used for MAINS measurements CATII 1000V, CATIII 600V according to IEC 61010-031

III.Safety operation rules

Please note the “warning signs and words”. Warning means the condition or action that may cause threat to user or damage to the instrument or equipment to be measured.

This Meter complies with EN 61010-1, 61010-2-032,61010-2-033, Pollution Degree 2, Overvoltage Category (CATII 1000V, CATIII 600V) and Double Insulation standards.

CONFORMS TO UL STD 61010-1 and IEC STD 61010-2-032
CERTIFIED TO CSA STD C22.2 NO.61010-1 and 61010-2-032

℄ This product has been tested to the requirementsof CAN/CSA-C22.2 No. 61010-1, second edition, including Amendment 1.

CAT II: Applicable to test and measuring circuits connected directly to utilization points(socket outlets and similar points) of the low-voltage MAINS installation.
CAT III: Applicable to test and measuring circuits connected to the distribution part of the building’s low-voltage MAINS installation.

1.Check the clamp ammeter and test pen before using, guard against any damage or abnormal

phenomenon. If any abnormal condition were found: bare test pen, damaged chassis insulation, no display in LCD, or the clamp meter is thought not be able to work normally, please do not use it.

2. It is forbidden to use the clamp ammeter prior to having rear cap and battery cover in place, or otherwise there will be electric shocking.
3. Keep finger within the scope of test pen finger protection position, and do not contact the bare wire and connector, unused input terminal or the circuit being measured when clamp ammeter is in operation.
4. Function switches shall be set at the correct position prior to measurement. It is forbidden to perform gear conversion in measurement to guard against damage to the meter.
5. Refrain from applying between the clamp ammeter terminals and ground the voltage over DC1000V/AC750V to guard against electric shocking and clamp meter damage.
6. Be careful in measuring RMS voltage higher than DC or AC 30V, since there will be electric shocking.
7. Do not measure the voltage or current higher than the allowable input value. Set the function range switch at the maximum range position if the scope of measured value couldn't be defined. Prior to measurement of on-line resistance and diode or the circuit on-off measurement, the power of circuits being measured shall be powered off and all capacitors shall be completely discharged to assure the measurement accuracy.

8. When LCD display shows the icon " " , it is required to replace the battery in time to ensure the measurement accuracy. Take out battery when clamp meter is not in user for a long time.
9. Refrain from changing the internal wiring in the clamp ammeter to guard against damage to the meter and danger.
10. Refrain from storing or using the clamp ammeter in the explosive and flammable environment with high temperature, high humidity and strong electromagnetic field.
11. Clean the clamp meter case with soft cloth and neutral detergent. To prevent causing corrosion to the case, or damage to the instrument and danger, it is forbidden to use abrasive material and solvent.

IV. Electrical symbols

⧈	Dual insulation
⏚	Grounding
⚠	Warning prompt
~	AC (Alternating current)
⎓	DC (Direct current)
•))	Buzzing on-off
▶|	Diode
⊣⊢	capacitance
≂	AC or DC (Alternating current or direct current)
⚠	Danger! High voltage!
CE	Comply with EU standard
ETL Intertek	This symbol signify the product comply with both USA and Canada requirement

V. External construction (See Figure 1)

1.Clamp head: A device used to measure AC/ DC current and covert current into voltage.
2.Clamp body:Safety design to protect operator from touching the dangerous area.
3.Clamp head pulling handle:Press the trigger to open the clamp head, when release the trigger, clamp head will partially closed.
4.Dial switch: Select the measurement function gear.
5.Function key: Select basic functions.
6.LCD display area: Display the measured data and functional symbols.
7.Measure input terminal:Measure the signal input.

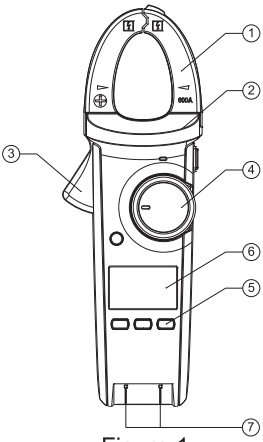

Figure 1

VI. LCD display (See Figure 2 and Figure 3)

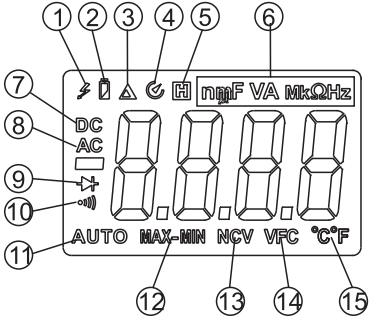

Figure 2

1	High voltage prompt
2	Battery low voltage prompt
3	Relative value prompt
4	Auto shutdown prompt
5	Data hold prompt
6	Unit prompt
7	DC signal prompt
8	AC signal prompt
9	Diode prompt
10	Circuit on-off measurement prompt
11	Auto range prompt
12	Max./min. measurement prompt
13	Non-contact AC voltage sensing prompt
14	1Frequency conversion measurement prompt
15	Temperature unit prompt

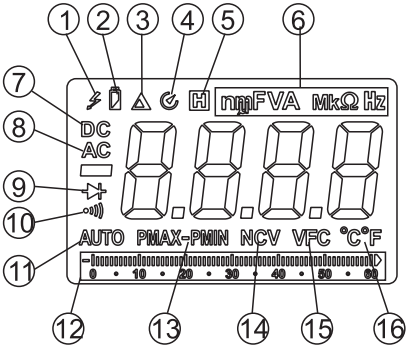

Figure 3

1	High voltage prompt
2	Battery low voltage prompt
3	Relative value prompt
4	Auto shutdown prompt
5	Data hold prompt
6	Unit prompt
7	DC signal prompt
8	AC signal prompt
9	Diode prompt
10	Circuit on-off measurement prompt
11	Auto range prompt
12	Simulation bar prompt
13	Max./min. measurement prompt
14	Non-contact AC voltage sensing prompt
15	Frequency conversion measurement prompt
16	Temperature unit prompt

VII. Key functions

1.SELECT

It is able to select gear by a short press.

Long press this key, LCD will display “VFC” symbol to enable frequency conversion signal measurement. It is only valid for AC voltage 600V and AC measure ment.Long press to forbid frequency conversion signal measurement.

2.HOLD

Short press this key once to enter data hold measurement mode, press again to exit data hold measurement mode.

Long press this key to turn backlight on, if long press within 15s, backlight will off. If no long press, backlight will automatically turn off in 15s.

3.MAX/MIN

Press once, LCD will display “MAX” to enter maximum measurement mode, press again, LCD will display “MIN” to enter minimum measurement mode. This process goes on and on. Long press this key to exit maximum /minimum value measurement. It is only valid for AC voltage, AC current, resistance and temperature measurement.

4.REL

With the exception of DC current gear, under the non-read back stored record data mode, it is able to enter the relative measurement mode with a short press, the main display will show: measured value-basic value. It is only valid for AC voltage, AC current, resistance

and capacitance measurement. Press again to exit relative value measurement mode. Under DC current gear measurement mode, short press to enter clearing mode, LCD will display " Δ ", press again to exit clearing mode.

When 703079 is at AC current gear, long press this key, LCD will display "RUSH"to enter surge current measurement mode, at this time, range is manual AC 600A gear. Long press again to exit surge current measurement, manual mode turns to auto mode.

5.FLIGHT

Long press this key, flashlight function is on. Short press this key, flashlight function is off.

VIII. Technical indicator

1.General specification

Liquid crystal display:maximum display 6000;

Polarity display:

auto positive and negative polarity display

Overload display: "OL" or "-OL"

Low voltage display:

"Figure 1" indicates that batter voltage is lower than working voltage, reminding replacing battery.

Sampling rate:about 3/s;

Sensor type: Hall effect sensor

Test position error:
an additional reading error of ±1.0% may be resulted when the power to be measured is not clamped at the center of clamp head
Impact resistance strength:
1m fall impact;
Maximum openness of clamp head:
diameter 30mm Maximum dimension of current conductor to be measured: diameter 30mm
Electromagnetic field impact:
the application of device near electromagnetic field may result in unstable display or inaccurate reading.
Power:
3 AAA 1.5V alkaline batteries
Dimension:
228mm×77mm×41mm;
Weight:
about 265g (inclusive of battery);
2.Environmental constraint:
Working height---indoor
Altitude----------2000m
Safety codes-----IEC61010-1;IEC61010-2-032;
----------CAT Ⅱ 1000V CATⅢ 600V；
Pollution grade--2;
Operating humidity and temperature----------
----------0℃ ~ 30℃(not bigger than 80%RH), 30℃～40℃ (not bigger than 75%RH), 40℃～50℃(not bigger than 45%RH).
Storage humidity and temperature----------
------ -20℃～+60℃ (not bigger than 80%RH)

3. Electrical specification

Accuracy----------± (%+ word number), one-year calibration time.
Ambient temperature----23℃±5℃;
Ambient humidity---------≤80% RH
Temperature coefficient--0.1×(accuracy) /℃

1.AC ($\tilde{A}$)

Range	Resolution	Accuracy	Overload protection
6. 000A (UT216A only)	0.001A	±(2.5%+30)	600A
60. 00A	0.01A	±(2.5%+5)	
600. 0A	0.1A		

Display: current true value: applicable for range from 10% to 100%.
Frequency response: 50Hz～60Hz;
The measurement accuracy of non-sinusoidal wave various frequency current should be 5% higher than the former.

2.AC ($\overline{\tilde{A}}$)

Range	Resolution	Accuracy	Overload protection
60.00A	0.01A	±(2.5%+5)	600A
600.0A	0.1A		

DCI base number should be deleted by key ZERO

3.AC voltage ($\tilde{V}$)

Range	Resolution	Accuracy	Overload protection
6.000V	0.001V	±(1.2%+5)	1000V DC 750V AC
60.00V	0.01V		
600.0V	0.1V		
750V	1V	±(1.5%+5)	

Display: voltage true value; applicable for range from 10% to 100%.
Voltage: Input impedance≥10MΩ;
Frequency response: 40～400Hz

4.DC voltage($\overline{\overline{V}}$)

Range	Resolution	Accuracy	Overload protection
600.0mV	0. 1mV	±(1.0%+8)	1000V DC 750V AC
6.000V	0.001V	±(0.8%+1)	
60.00V	0.01V	±(0.8%+3)	
600.0V	0.1V		
1000V	1V	±(1.0%+3)	

Input impedance≥10MΩ

5.Resistance(Ω)

Range	Resolution	Accuracy	Overload protection
600.0Ω	0.1Ω	±(1.2%+2)	1000V DC 750V AC
6.000kΩ	0.001kΩ	±(1.0%+2)	
60.00kΩ	0.01kΩ		
600.0kΩ	0.1kΩ		
6.000MΩ	0.001MΩ	±(1.2%+2)	
60.00MΩ	0.01MΩ	±(1.5%+5)	

6.Continuity test (•))

Range	Resolution	Accuracy	Overload protection
600. 0Ω	0. 1Ω	Buzzer beeps when <30Ω	1000V DC 750V AC
		Open-circuit voltage is about 1.2V	

7.Diode test (→|)

Range	Resolution	Accuracy	Overload protection
6.000V	0.001V	Open-circuit voltage is about3.3V, measurable PN knot ≤3V positive pressure drop value. Silicon PN normal voltage value is about 0.5～0.8V.	1000V DC 750V AC

8.Capacitance (⊣⊢)

UT216A/B

Range	Resolution	Accuracy	Overload protection
99.99nF	0.01nF	±(4.0%+25)	1000V DC 750V AC
999.9nF	0.1nF	±(4.0%+5)	
9.999uF	0.001uF		
99.99uF	0.01uF		
999.9uF	0.1uF		
9.999mF	0.001mF	±(10%)	
59.99mF	0.01mF	For reference only	

UT216C

Range	Resolution	Accuracy	Overload protection
60.00nF	0.01nF	±(4.0%+25)	1000V DC 750V AC
600.0nF	0.1nF	±(4.0%+5)	
6.000uF	0.001uF		
60.00uF	0.01uF		
600.0uF	0.1uF		
6.000mF	0.001mF	±(10%)	
60.00mF	0.01mF	For reference only	

9.Temperature(℃)

Range	Resolution	Accuracy	Overload protection
−40℃~40℃	1℃	±(3.0%+5)	1000V DC 750V AC
40℃~400℃			
400℃~1000℃		±(2.0%+5)	
−40℉~104℉	1℉	±(3.0%+10)	
104℉~752℉			
752℉~1832℉		±(2.0%+10)	

10.Frequency Hz

Range	Resolution	Accuracy	Overload protection
10Hz ~ 1 MHZ	0.01Hz ~ 1K Hz	±(0.1%+4)	1000V DC 750V AC

Requirement on input range:
≤100kHz：100mVrms≤input range≤20Vrms
>100kHz～1MHz：200mVrms≤input range ≤20Vrms

11.NCV

Range	Accuracy
NCV	⩾100Vrms；⩽10mm (LED/Buzzer indication)

IX. Instructions for measurement operation

1.AC measurement (see Figure 4)

1) Push the switch to AC current gear , press trigger to open the clamp head to take the conductor to be measured, then slowly loosen the trigger until clamp head is completely closed. Be sure the conductor to be measured is clamped at the center of clamp head, if not, additional error may be resulted, and clamp ammeter can only measure one current conductor, measuring two or more current conductors concurrently may result in wrong measurement reading.
2) Read true value of AC directly from the display.
3) Long press SELECT key at AC gear to select VFC measurement to measure frequency converter current.
4) It is able to press REL at AC current gear to select INRUSH surge current measurement. After starting electrical appliance, the instant -on current of appliance can be measured out; press INRUSH key again to quit the surge current measurement. 600A range can be available for surge current measurement.

⚠ Note:

- Current measurement must be operated within 0℃～40℃, if positive reading is achieve after measuring DC current, the current direction will be from up to down (the upward is panel and base cap is downward). Do not loosen trigger abruptly, since Hall component is sensitive in some extent to magnet, heat and mechanical stress, but also to the impact, which may cause short-time reading variation.
- Be sure the conductor to be measured is clamped at the center of clamp head, if not, an additional reading error of ±1.0% may be resulted.
- AC conversion adopts the AC coupling true RMS response mode, sinusoidal input for correction. The accuracy of non-sinusoidal wave shall be adjusted as follows:
  Crest factor 1.4～2.0, accuracy should be increased 1.0%;
  Crest factor 2.0～2.5, accuracy should be increased 2.5%;
  Crest factor 2.5～3.0, accuracy should be increased 4.0%;

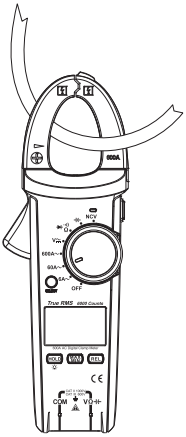

Figure 5

2. DC current measurement (See Figure 5)

1) Push the switch to DC current gear , when LCD display is not zero, press REL to clear. After measuring big current gear, clamp head will be left with remanence, and LCD display will have base values.

2) Press trigger to open the clamp head to take the conductor to be measured, then slowly loosen the trigger until clamp head is completely closed. Be sure the conductor to be measured is clamped at the center of clamp head, if not, additional error may be resulted, and clamp ammeter can only measure one current conductor, measuring two or more current conductors concurrently may result in wrong measurement reading.

3) Directly read out the measured DC current value from display.

⚠Note:

- Current measurement must be operated within 0℃～40℃, if positive reading is achieve after measuring DC current, the current direction will be from up to down (the upward is panel and base cap is downward). Do not loosen trigger abruptly, since Hall component is sensitive in some extent to magnet, heat and mechanical stress, but also to the impact, which may cause short-time reading variation.
- Be sure the conductor to be measured is clamped at the center of clamp head, if not, an additional reading error of ±1.0% may be resulted.

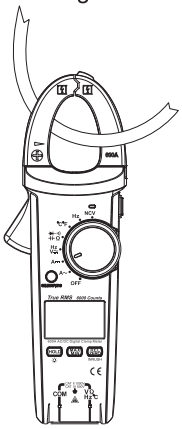

Figure 5

3. AC voltage measurement (see Figure 6)

1) Insert red test pen in “V” jack and black test pen in “COM” jack.
2) Push the function range switch to the DC voltage measurement gear , and connect test pen in parallel with the power or load to be measured.
3) Read true value of AC voltage from the display.
4) Long press SELECT key at AC voltage gear to select VFC measurement, measure frequency converter voltage.
5) For 703079 , long press SELECT key can select frequency measurement of AC voltage. Conditions must be met when reading frequency value: input range ⩾range×10%. (testing range of frequency gear at voltage gear is 40Hz—400Hz)

⚠Note:

- Do not input voltage higher than AC 750V. It may be feasible to measure higher voltage, but damage will be caused to the meter.
- Pay attention to the electric shock in measuring high voltage.
- After completing all measurement operations, disconnect test pen from the measured circuit.
- When measured voltage is higher than the safety voltage 30V/AC, the meter LCD displays

high voltage warning prompt "⚡"; when inputting overvoltage, higher than AC 750V gear range, the meter ⚡ will automatically sound intermittent buzzing and high voltage warning prompt will automatically flash to provide warning prompt.

- AC conversion adopts the AC coupling true RMS response mode, sinusoidal input for correction. The accuracy of non-sinusoidal wave shall be adjusted as follows:
  Crest factor 1.4～2.0, accuracy should be increased 1.0%;
  Crest factor 2.0～2.5, accuracy should be increased 2.5%;
  Crest factor 2.5～3.0, accuracy should be increased 4.0%;

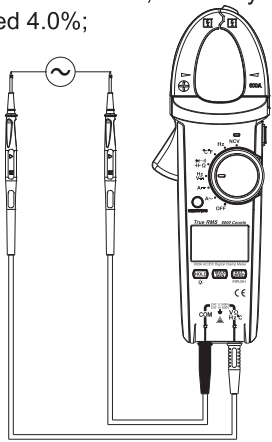

Figure 6

4. DC voltage measurement (See Figure 7)

1) Insert red test pen in “V” jack and black test pen in “COM” jack.
2) Push the function range switch to the DC voltage measurement gear , and connect test pen in parallel with the power or load to be measured.
3) Directly read the measured resistance value from display.

⚠Note:

- Do not input voltage higher than 1000V. It may be feasible to measure higher voltage, but damage will be caused to the meter.
- When measuring at 600mV gear, in order to obtain precise reading, the relative measurement function can be adopted. First, input test pen under short-circuit condition, press the REL, read resistance measurement value after the meter automatically deducts the test pen displayed value under short-circuit condition.
- Watch out for electricity shocking when measuring high voltage.
  After completing all measurement operations, disconnect test pen from the measured circuit.
- When measured voltage is higher than the safety voltage 30V/DC, the meter LCD displays high voltage warning prompt “ ϟ ”; when inputting overvoltage, higher than DC 1000V gear range, the meter ϟ will automatically sound intermittent buzzing and high voltage warning prompt will automatically flash to provide warning prompt.

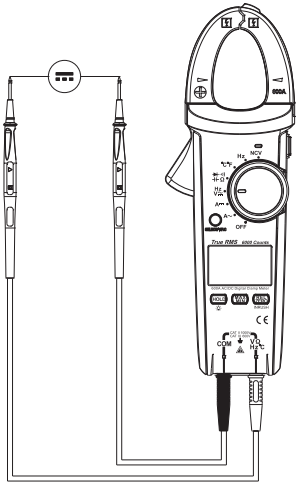

Figure 7

5. Resistance measurement (See Figure 8)

1) Insert red test pen in “Ω” jack and black test pen in “COM” jack.
2) Push the function range switch to the measurement gear “Ω”, press SELECT to select resistance measurement Ω and connect test pen in parallel with the two terminals of measured resistance .
3) Directly read the measured resistance value from display.

⚠Note:

- If the resistance open circuit or resistance being measured exceeds the maximum range of the meter, display will show “OL”.

- Before measuring resistance on-line, the power of circuits being measured shall be powered off and all capacitors shall release out residues of electric charges to assure the measurement accuracy.

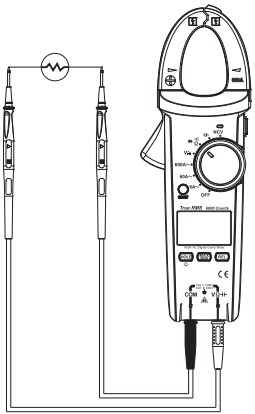

Figure 8

6. Continuity test (see Figure 9)

1) Insert red test pen in “Ω” jack and black test pen in “COM” jack.
2) Push the function range switch to the measurement gear “ •)) ”, press SELECT to select circuit on-off measurement •)) and connect test pen in parallel with the two terminals of measured circuit. When the measured resistance between two terminals <30Ω, the circuit should be deemed conductive,

buzzer will sound continuously. When resistance is ⩾30Ω and ⩽60Ω, the buzzer will not sound. When resistance is＞60Ω, the buzzer will not sound.

3)Directly read the measured resistance value loaded by the circuit from display.

⚠Note:

- When checking on-line circuit on-off condition, it is required, prior to measurement, to power off all powers in the measured circuit, and discharges all residual charges in the capacitor.
- With respect to the circuit on-off measurement, open-circuit voltage is approximately -3.5V and range should be 600Ω measurement gear.
- Do not input voltage higher than DC or AC 30V, which may cause personal injury.
- After completing all measurement operations, disconnect the test pen from the measured circuit.

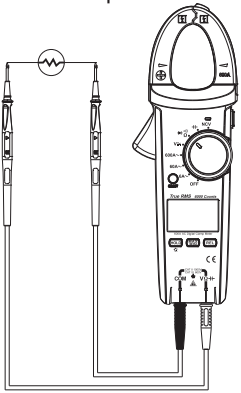

Figure 9

7. Diode measurement (See Figure 10)

1) Insert red test pen in “Ω” jack and black test pen in “COM” jack. Polarity of red and black test pen is respectively “+” and “-”.
2) Push the function range switch to the measurement gear “⊣◀”, press SELECT to select diode measurement ⊣◀ and directly read out the approximate forward direction PN junction voltage. For silicon PN junction, generally 500～800mV is confirmed to be the normal value.

⚠Note:

- “OL” will be displayed when the measured diode is open-circuit or polarity is inversely connected.
- Before measuring diode, the power of circuits being measured shall be powered off and all capacitors shall release out residues of electric charges to assure the measurement accuracy.
- The test open-circuit voltage of diode is approximately 3.5V.
- Do not input voltage higher than DC or AC 30V, which may cause personal injury.
- After completing all measurement operations, disconnect the test pen from the measured circuit.

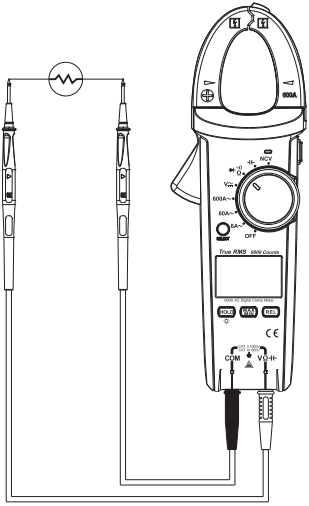

Figure 10

8. Capacitance measurement (See Figure 11)

1) Insert red test pen in "⊣⊢" jack and black test pen in "COM" jack. Measure by REL mode.
2) Push the range switch to the measurement gear "⊣⊢", press SELECT to select "capacitance", connect test pen in parallel with the two terminals of measured capacitance.
3) Directly read out the capacitance value of measured circuit from display. It is recommended to carry out capacitance measurement with test short line input, thus reducing the impact caused by distributed capacitance.

⚠Note:

- If the measured capacitance is short circuited or capacitance exceeds the maximum range of the meter, display will show “OL”.Under capacitance measurement mode, simulation bar indicator is forbidden. It will take longer time to achieve the correct reading when measuring capacitance larger than 600μF.
- To ensure the measurement accuracy, it is recommended to discharge all residual charges in the capacitor before test, then input meter for measurement, which is of particular importance to the capacitor with high voltage.
- It is required to prevent damage to the meter and personal injury.
- After completing measurement operation, disconnect the test pen from the measured capacitance.

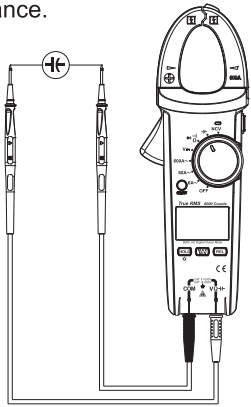

Figure 11

9. Frequency (See Figure 1 2)

1) Insert red test pen in “Hz” jack and black test pen in “COM” jack.
2) Push the range switch to the measurement gear “Hz” and connect test pen in parallel with the signal source to be measured.
3) Directly read out the measured frequency value from display.

⚠Note:

- It is required to meet the input range a when measuring: ≤ 100kHz 100mVrms ≤ a ≤ 20Vrms
- Do not input frequency higher than 30V rms, which may cause personal injury.
- After completing all measurement operations, disconnect the test pen from the measured circuit.

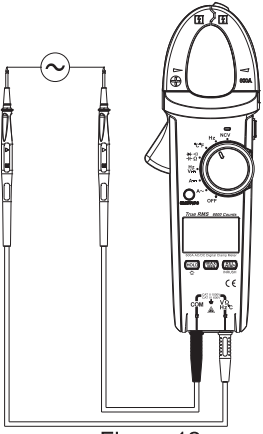

Figure 12

10. Temperature measurement (see Figure 1 3)

1) Push range switch to "℃ ℉" gear, LCD will display OL, the short-circuit test pen displays the room temperature.
2) Insert temperature K type socket in the corresponding hole as per the diagram.
3) Put temperature robe detect the measured surface, several seconds later, directly read out the measured Celsius temperature value from LCD.
4) Press SELECT to select Fahrenheit temperature measurement.

⚠Note:

- The meter should not be operated in a place with ambient temperature beyond the range 18-28℃ æresulted, particularly evident in low temperature environment.
- Do not input voltage higher than DC or AC 30V, which may cause personal injury.
- After completing all measurement operations, take off the temperature probe.

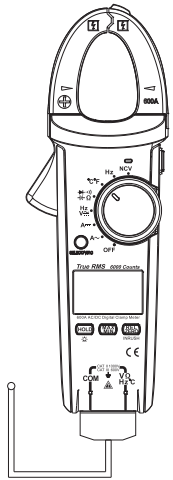

Figure 1 3

11. Non-contact AC voltage sensing NCV (see Figure 14)

In order to sense whether there is AC voltage or electromagnetic field in this space, place front end of clamp meter near conductor to be tested to sense detection (distance <10mm). When electric field voltage ⩾100VAC, LCD will display “-”, which has four levels “- ”, “- -” , “- - -” ,“- - - -” subject to sensing voltage.

Buzzer will continue to beep and LED flashes red light.

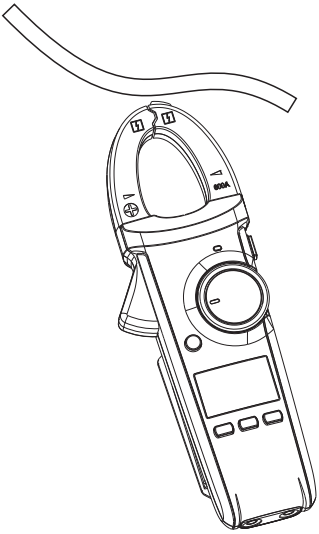

Figure 14

12. Power gear(OFF)

Instrument should be powered off.

13. Automatic shutdown function

If not turning knob switch or pressing key to the clamp ammeter within the user-defined shutdown time (default 15min), display will be blank and enter the low power consumption dormant state. If need to wake up meter, press key to wake up meter.

Press SELECT key to start up machine. Automatic shutdown function is forbidden.

X. Maintenance and upkeep (see Figure 15)

Warning: to prevent electric shocking, it is required to keep the test pen away prior to opening the base cap.

1. General maintenance

a. The clamp meter should be maintained and serviced by qualified professional serviceman or designated maintenance department.

b. Clean the outer case with cloth, it is forbidden to clean with cleaning agent containing abrasive material or solvent.

2. Installation or replacement of battery

3 AAA 1.5V batteries will provide power for this product. Please install or replace battery as follows:

a. Shut down the clamp meter, move away the test pen located at the input terminal.

b. Put the panel facing down, screw out the

battery box screws, take off battery cap and take out battery, install new battery as per the indication of polarity.

b. It is required to install the batteries of the same model. Do not install the improper battery.

c. After installing new battery, load the battery cap and screw on screws.

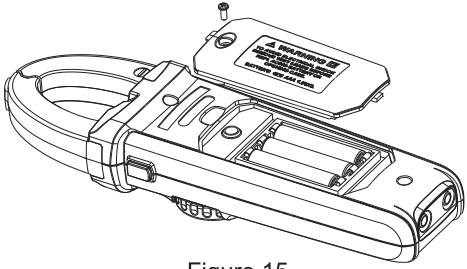

Figure 15